Angled Probe VAC with Hose Barb 7mm - AGA

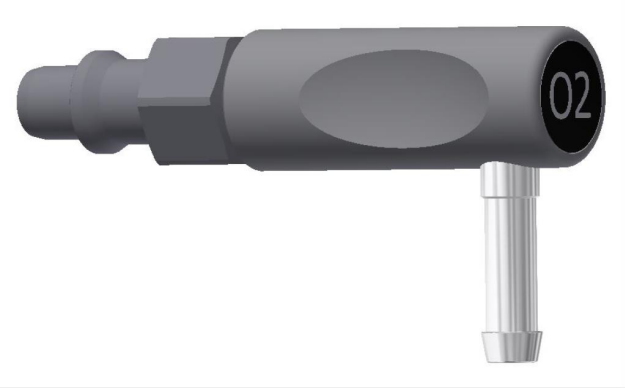

Manufacturer:	Greggersen
Product Number:	901551

Description

Angled Probe

Specification:

Gas type: Vacuum

Inlet: Probe according to SS 87 524 30 (AGA)

Outlet: Hose Barb 7 mm

Properties

Gas Type	VAC-Vacuum

© 2026, Greggersen Gasetechnik GmbH